Boss Asymmetrical/Symmetrical Mod

by **soupbone71** » 21 Nov 2014, 09:01

I was trying to figure out how to use a switch,to switch between a 51pf cap and 2 diodes(symmetrical clipping),and a 1N914,or a different diode,for asymmetrical clipping.Does anyone have a diagram on how to wire it?I would think you would need a dpdt switch,unless you can use a spdt switch?Any help would be gladly appreciated!

soupbone71

Re: Boss Asymmetrical/Symmetrical Mod

by **charmonder** » 21 Nov 2014, 19:35

We could use more info, but it sounds like a spdt switch ought to cover it.

charmonder

Re: Boss Asymmetrical/Symmetrical Mod

by **soupbone71** » 21 Nov 2014, 23:03

Here's how I would wire it up,using a dpdt switch; Unsolder D6.Run 2 wires from D6's blank holes.(this is for the sd-1) to the 2 middle lugs of the switch.(on-on) Solder a 1N914 diode across 2 outer lugs of the switch.Solder a 51pf cap across the other outer 2 lugs of the switch.That's how I would wire it up.If you can do the same thing with a spdt switch,that would be great!

soupbone71

Re: Boss Asymmetrical/Symmetrical Mod

by **cctsim** » 22 Nov 2014, 01:37

This is how I'd do it. The cap can be added in parallel with the diodes.

The diagram is meant to be used with a SD1.

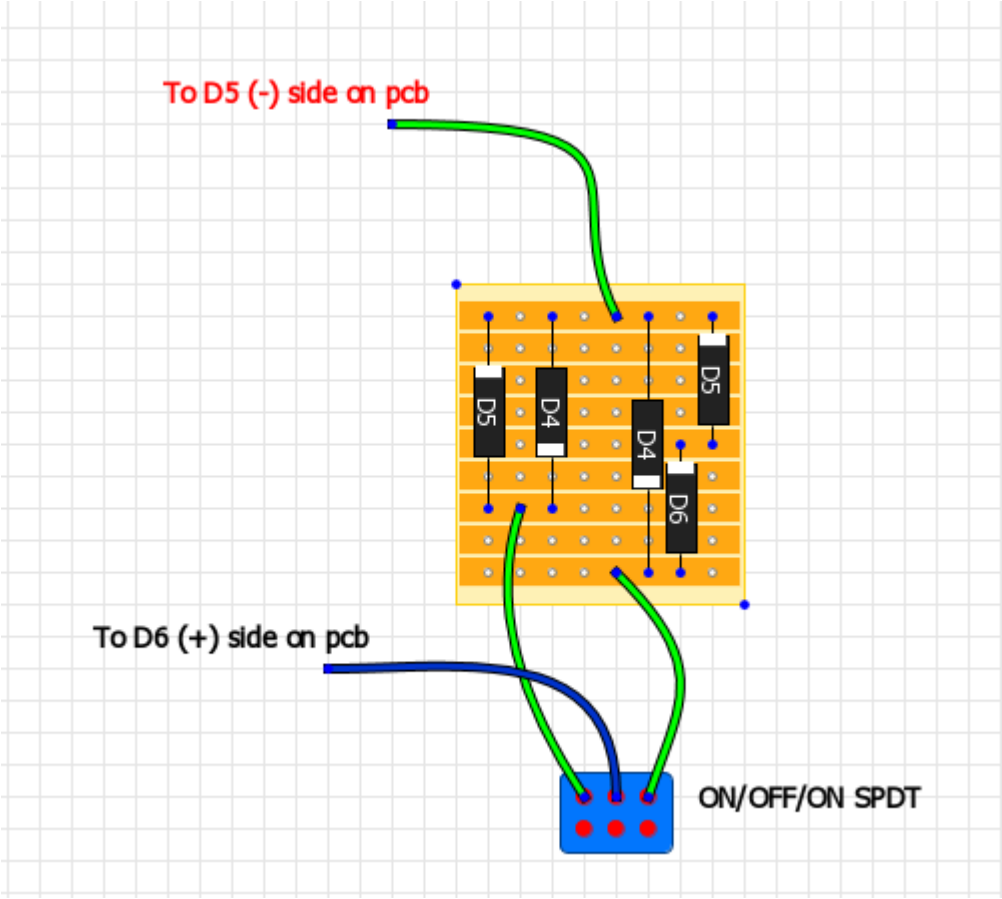

cctsim

Re: Boss Asymmetrical/Symmetrical Mod

by **charmonder** » 22 Nov 2014, 04:05

Assuming this is an SD-1 correct? it could be even easier, just use an spst to short out D6. But how did you want the 51pf cap to fit in the picture exactly?,

charmonder

Re: Boss Asymmetrical/Symmetrical Mod

by **cctsim** » 22 Nov 2014, 13:27

The cap can go in the position of D4 on the main PCB. You will need to take D4, D5 and D6 off the PCB if you use the suggested strip board.

Yes you can short D6 that will work but you will have to wedge in the 51pF cap and the wires somehow.

The strip board just gives you the option to experiment with different configurations without damaging the PCB.

If you use a ON/OFF/ON switch you have also clean boost in the OFF position.

cctsim

Re: Boss Asymmetrical/Symmetrical Mod

by **charmonder** » 22 Nov 2014, 20:24

Good points. the three position sounds like an awesome feature!

charmonder

Re: Boss Asymmetrical/Symmetrical Mod

by **soupbone71** » 23 Nov 2014, 01:34

> *Charmonder wrote:*
> *Assuming this is an SD-1 correct? it could be even easier, just use an spst to short out D6. But how did you want the 51pf cap to fit in the picture exactly?,*

Here's a link on how i was originally trying to do it,but the way he has the switch wired,it puts the diode in series with the 51pf cap.I think?Thanks! http://www.musictoyzforums.com/showthread.php?1026-SD-1-Clipping-Mod

soupbone71